KILO INTERNATIONAL

Mechanical Specifications: *JD SERIES*

JD90 - Black Gloss, JD75 - Black Matte & Clear Gloss, JD50 - Clear Matte

JD Series: The "JD Series" knob is simple, yet very traditional in appearance and feel. The look of this knob is long established an well respected. Saw cut indicator line is on half of the top and full-length of the side. Two 6-32 set screws.

TOP VIEW **SIDE VIEW**

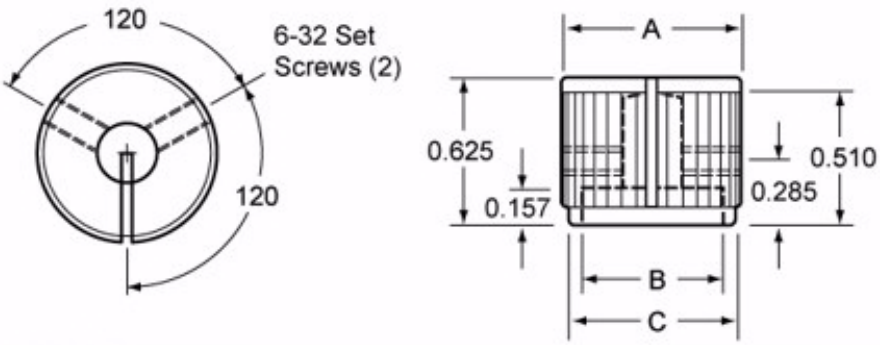

MODEL	A	B	C	COLOR CHOICE	SHAFT
50	.500	.375	.445	1 - CLEAR GLOSS	5 - .250
75	.750	.590	.695	2 - BLACK GLOSS	6 - .125
90	.925	.708	.882	3 - CLEAR MATTE	6mm - 6mm
				4 - BLACK MATTE	

contact:
KILO INTERNATIONAL

1952 Ironton Blvd
Provo, UT 84606
USA

TEL 801.377.5530
FAX 801.377.5573

Copyright ©2005 Kilo International

KILOINTERNATIONAL.COM KILOINTERNATIONAL.COM KILOINTERNATIONAL.COM KILOINTERNATIONAL.COM KILOINTERNATIONAL.COM KILOINTERNATIONAL.COM